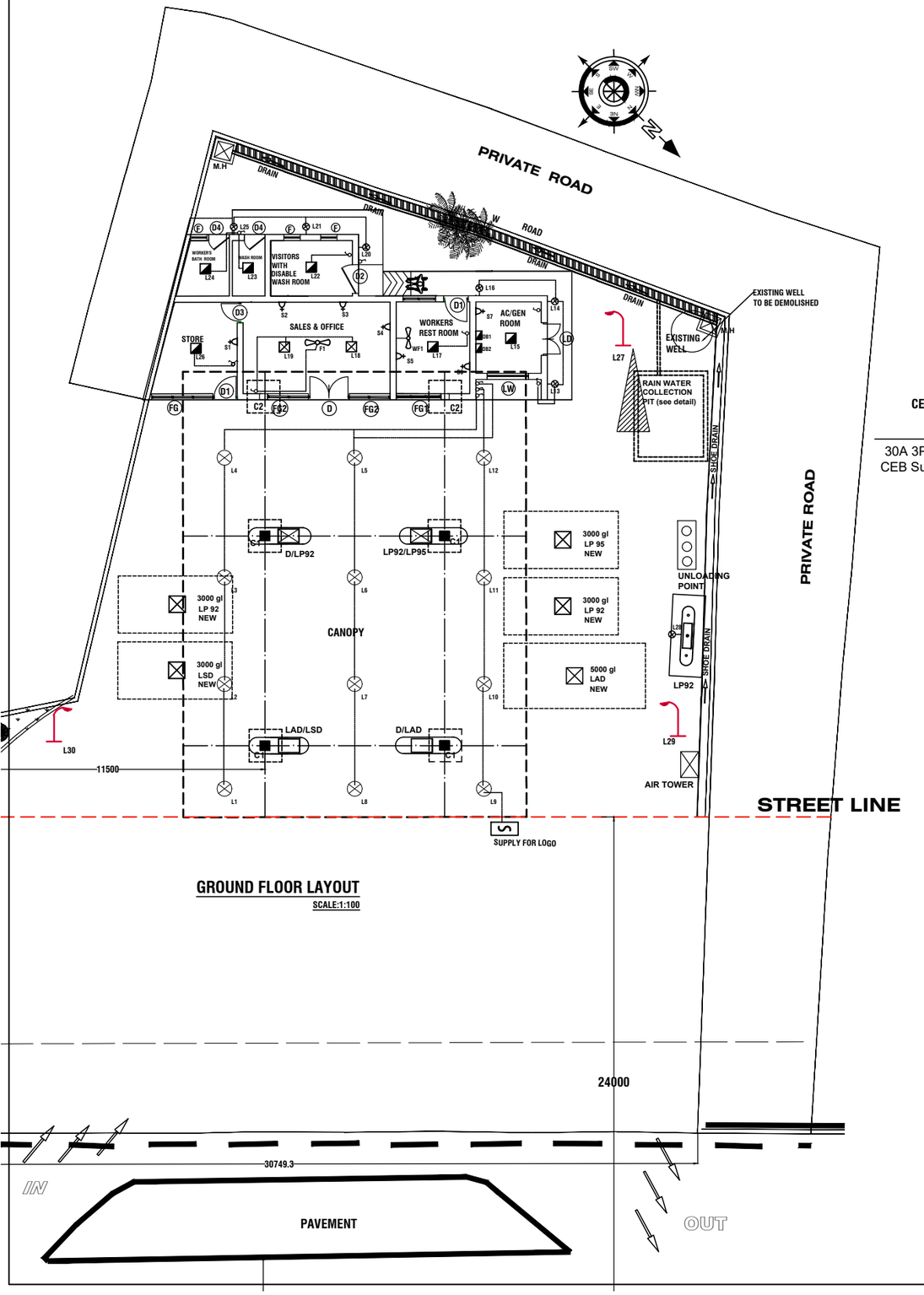

GROUND FLOOR LAYOUT

SCALE:1:100

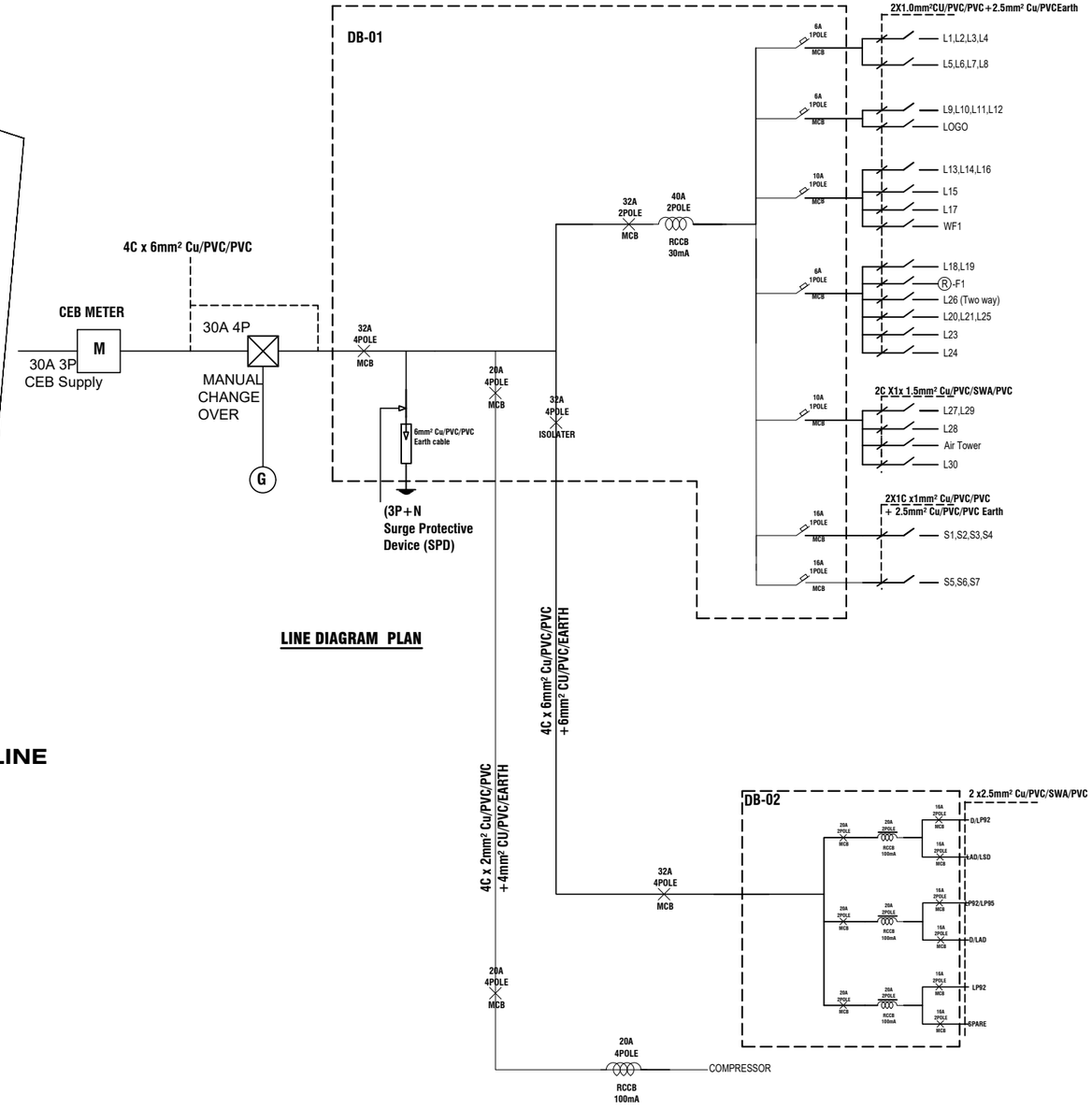

LINE DIAGRAM PLAN

LEGEND

TYPE	DESCRIPTION	SYM.
⊗	LED 100W HIGH DAY LIGHT FITTING (2P 65)	
◪	PANEL LIGHT-CEILING RECESSED 18 W LED LAMP	
1	YARD LIGHT FITTINGS WITH 100W LED BULB. (2P 65)	
⊙	PENDENT LIGHT LED 11W	
–⊗	WATER PROOF WALL BRACKET LIGHT FITTING 15W LED	
	56 INCH DIAMETER CEILING FAN	F
	WALL FAN	WF
▷	SWITCH SOCKET OUTLET 13 A.	S
	10A SWITCH	
	10A TWO WAY SWITCH	
◪	DISTRIBUTION BOARD	DB

REV.	DESCRIPTION	DATE
01		13-05-2026

CEYLON PETROLEUM CORPORATION

ENGINEERING DEPARTMENT
NO. 609,
DR. DANISTER DE SILVA MAWATHA,
DEMATAGODA,
COLOMBO -09.

TP. NO. 5661717, 5661818
FAX 5455408

PROJECT
MODIFICATION OF LANKA FILLING STATION AT MARADANA

TITLE
ELECTRICAL DIAGRAM

ENGINEER
P.BOMBUGALA

DRAWING NO
CEYPET / ENG / 0650- E

SCALE 1:100 **DATE** 13-05-2026

DRAWN BY PRABATH

CHECKED BY

APPROVED BY ENGINEERING & PREMISES MANAGER